Starting Block Cover

Industry leader - ***highest quality products since 1972***
Spectrum Starting Block Cover
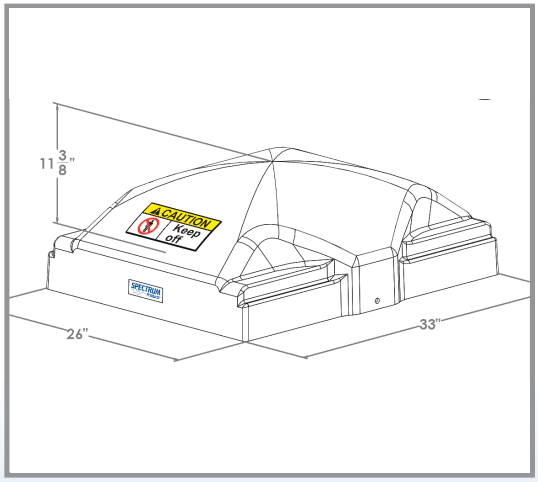
- Sturdy precision ABS vacuum formed plastic
- Stops unauthorized use of platforms and protects platform surface
- Includes bungie and * optional cable lock
- Fits competition grade block top sizes up to 25” wide and up to 32” long
- Standard white with UV Protection
- Durable textured surface
- Easy Stack = Easy Storage